NOVAS

# **B ROUND ROSE DOOR FURNITURE** PRIVACY SET 63 LEVER

## DETAILS

**PRODUCT CODE**
B0463

**DOOR THICKNESS**
Suits 32-50mm Doors

**FIXING**
Concealed 38mm-41mm horizontal bolt through fixing

**HANDING**
Non-Handed

**MATERIAL**
304 Grade Stainless Steel

**OVERALL DIAMETER**
54mm

**OVERALL THICKNESS**
10mm

**PRODUCT SERIES**
B Round Rose Door Furniture

**WARRANTIES**
25 Years Mechanical

**NOTES**
Includes latch in set

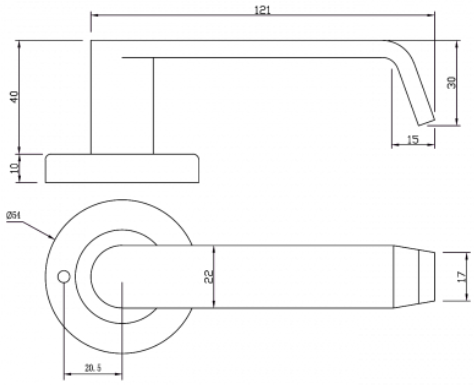


## FINISHES

Polished Stainless Steel (PSS)
Satin Black (SBL)
Satin Antique Bronze (SABZ)
Satin Stainless Steel (SSS)
Gun Metal (GM)
Satin Gold (SG)