NOVAS

WAVE EZY HEIGHT RIMLESS WALL FACED PAN

DETAILS

PRODUCT CODE
WAVRWFPAB

DIMENSIONS
565mm x 365mm x 430mm

COLOUR
Gloss White

MATERIAL
Vitreous China

PRODUCT SERIES
Wave

SET OUT
75mm-120mm

SET OUT TYPE
S Trap

WELS RATING
4.5L/3L 4 STAR

WARRANTIES
15 Ceramic / 3 Seat

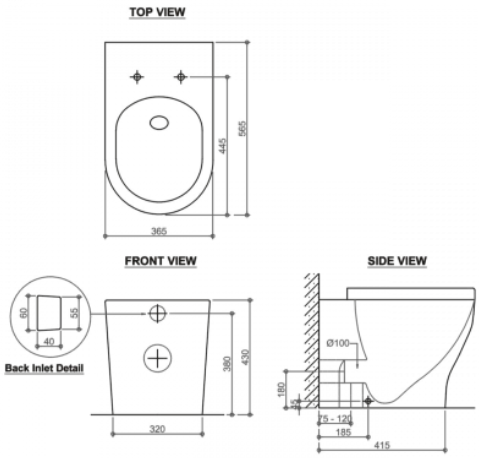

CERTIFICATIONS